Cambridge Assessment International Education

Cambridge IGCSE™

PHYSICS **0625/22**

Paper 2 Multiple Choice (Extended) **May/June 2021**

45 minutes

You must answer on the multiple choice answer sheet.

You will need: Multiple choice answer sheet
Soft clean eraser
Soft pencil (type B or HB is recommended)

INSTRUCTIONS

- There are **forty** questions on this paper. Answer **all** questions.
- For each question there are four possible answers **A**, **B**, **C** and **D**. Choose the **one** you consider correct and record your choice in soft pencil on the multiple choice answer sheet.
- Follow the instructions on the multiple choice answer sheet.
- Write in soft pencil.
- Write your name, centre number and candidate number on the multiple choice answer sheet in the spaces provided unless this has been done for you.
- Do **not** use correction fluid.
- Do **not** write on any bar codes.
- You may use a calculator.
- Take the weight of 1.0 kg to be 10 N (acceleration of free fall = 10 m / s^2).

INFORMATION

- The total mark for this paper is 40.
- Each correct answer will score one mark.
- Any rough working should be done on this question paper.

This document has **16** pages.

IB21 06_0625_22/5RP
© UCLES 2021

[Turn over

www.root19.com +91 - 9969 353 391

1 Which piece of apparatus is the most suitable for measuring the mass of a pencil sharpener?

A digital balance

B measuring cylinder

C newton meter

D ruler

2 Four balls with different masses are dropped from the heights shown.

Air resistance may be ignored.

Which ball has the smallest average speed?

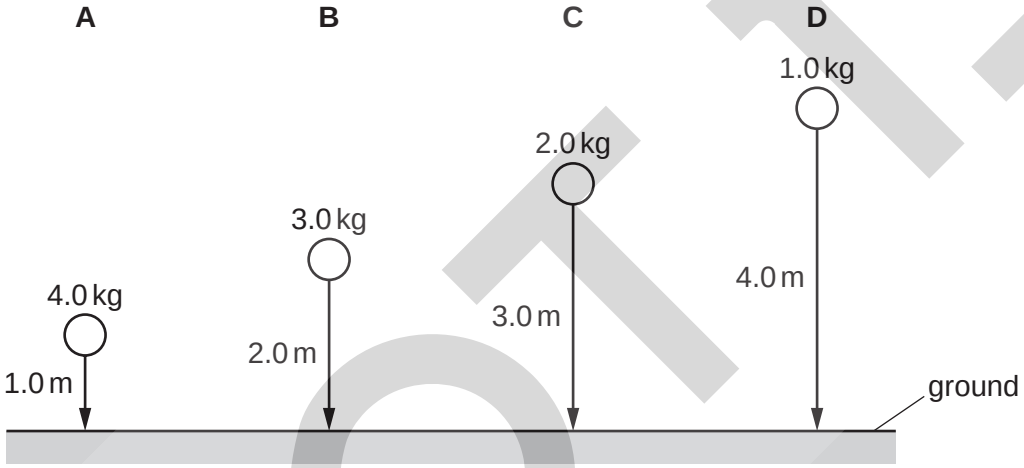

www.root19.com +91 - 9969 353 391

3 A ball is thrown vertically upwards through the air. Air resistance acts on the ball.

Which graph shows how its speed varies with time?

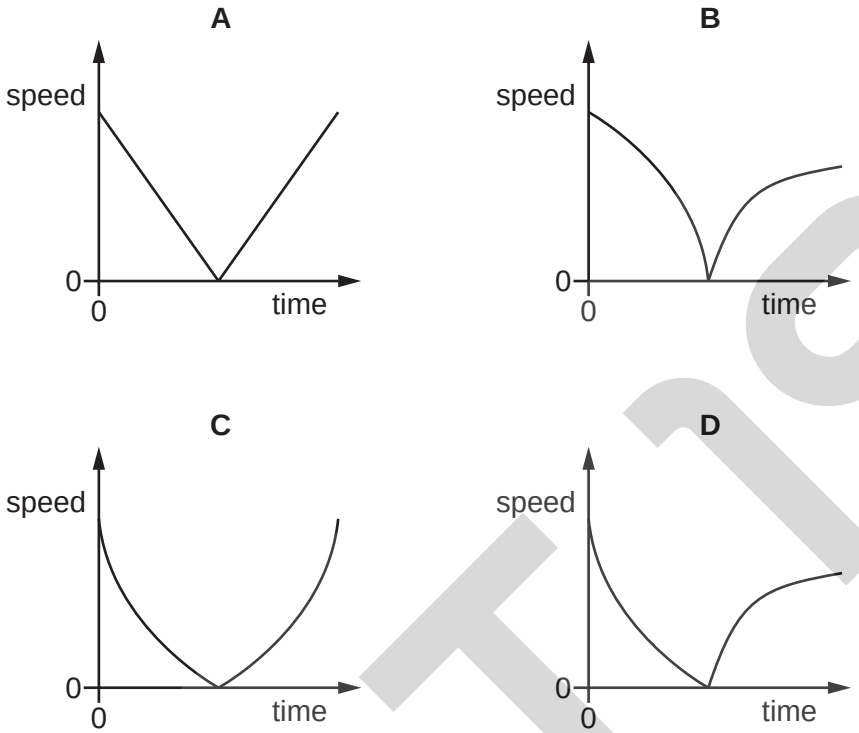

4 What is the best description of the meaning of the 'mass' of an object?

A the space occupied by the object

B the force that gravity exerts on the object

C the resistance of the object to changes in motion

D the closeness of packing of the molecules in the object

www.root19.com +91 - 9969 353 591

5 A measuring cylinder contains 40 cm^3 of water.

A stone of mass 94 g is lowered into the water so that it is fully submerged as shown.

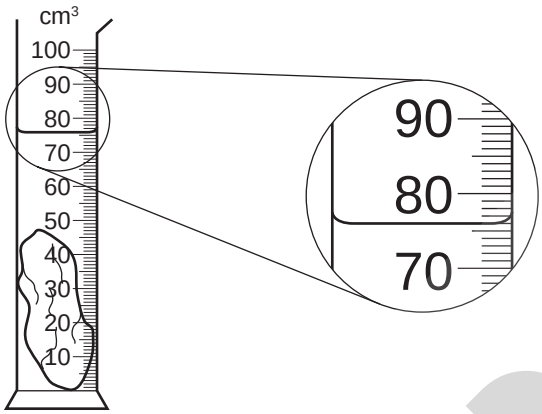

What is the density of the stone?

A 1.1 g / cm^3 **B** 1.2 g / cm^3 **C** 2.1 g / cm^3 **D** 2.6 g / cm^3

6 The extension–load graph for a spring is shown. The unstretched length of the spring is 17.0 cm.

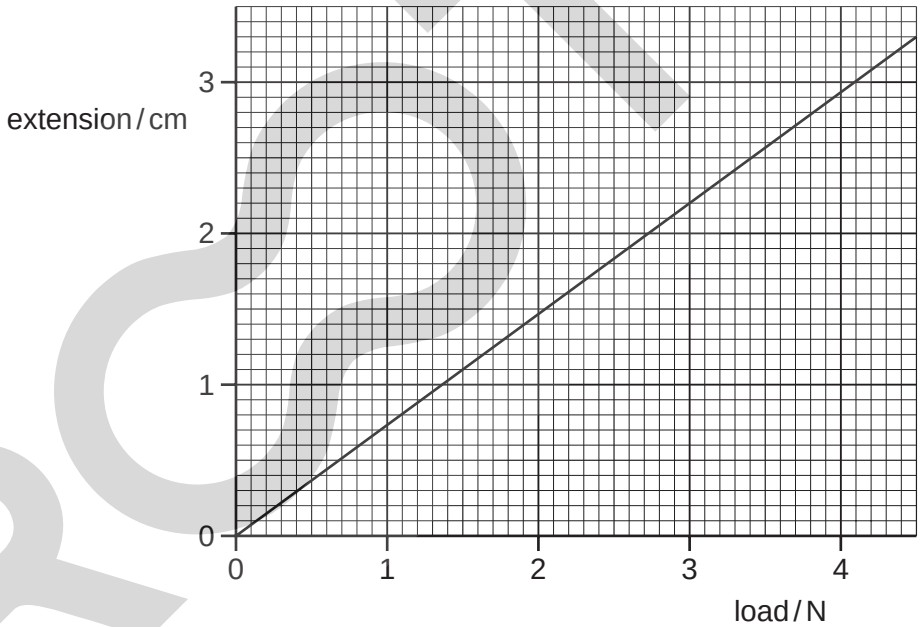

When an object is suspended from the spring, the length of the spring is 19.2 cm.

What is the weight of the object?

A 1.4 N **B** 1.6 N **C** 2.6 N **D** 3.0 N

www.root19.com +91 - 9969 353 391

7 A satellite orbits the Earth in an anticlockwise direction at constant speed, as shown.

When the satellite is in the position shown, in which direction does the resultant force act upon it?

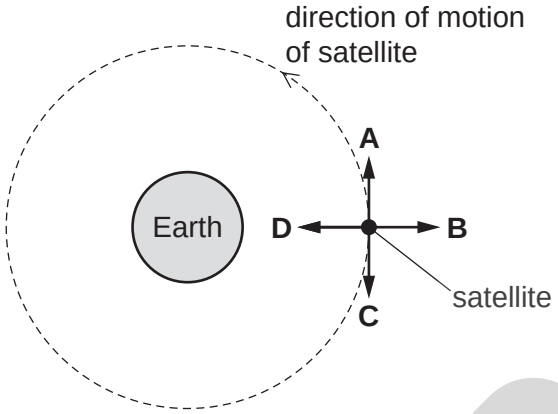

8 A tennis ball has a mass of 57 g.

A tennis player hits the tennis ball with a tennis racket. The tennis ball has a velocity of 25 m / s when it hits the racket.

The velocity of the tennis ball when it leaves the player's racket is 15 m / s in the opposite direction from its approaching direction.

The average force exerted by the tennis racket on the ball is 35 N.

For how long is the tennis ball in contact with the tennis racket?

A 0.015 s **B** 0.016 s **C** 0.065 s **D** 0.65 s

9 This question is about four methods used to produce electrical energy.

Which method has a correct description?

	method	energy source is renewable	emits carbon dioxide
A	a hydroelectric power station	yes	no
B	a coal-fired power station	no	no
C	a wind turbine	no	yes
D	a nuclear power station	yes	yes

10 A stone is released from rest from a high building on Earth. Air resistance is negligible.

What is its velocity when it has fallen 5 m?

A 7.1 m / s **B** 10 m / s **C** 50 m / s **D** 100 m / s

www.root19.com +91 - 9969 353 591

11 The power input to an electric motor is 400 W. The efficiency of the motor is 85%.

How much power is wasted?

A 60 W **B** 85 W **C** 340 W **D** 470 W

12 A book has a mass of 400 g.

The surface of the book in contact with a table has dimensions 0.10 m × 0.20 m.

The gravitational field strength *g* is 10 N / kg.

What is the pressure exerted on the table due to the book?

A 0.08 N / m^2 **B** 8.0 N / m^2 **C** 20 N / m^2 **D** 200 N / m^2

13 A horizontal metal plate of area 0.50 m^2 lies at the bottom of a lake at a depth of 40 m.

The density of water is 1000 kg / m^3 and the gravitational field strength *g* is 10 N / kg.

What is the downward force acting on the plate due to the water?

A 20 kN **B** 80 kN **C** 200 kN **D** 800 kN

14 Which row describes the forces between the molecules and the motion of the molecules in a gas?

	forces between molecules	motion of molecules
A	strong	move freely
B	strong	vibrate only
C	weak	move freely
D	weak	vibrate only

© UCLES 2021
www.root19.com

+91 - 9969 353 391

15 Very small pollen grains are suspended in water. A bright light shines from the side.

When looked at through a microscope, small specks of light are seen to be moving in a random, jerky manner.

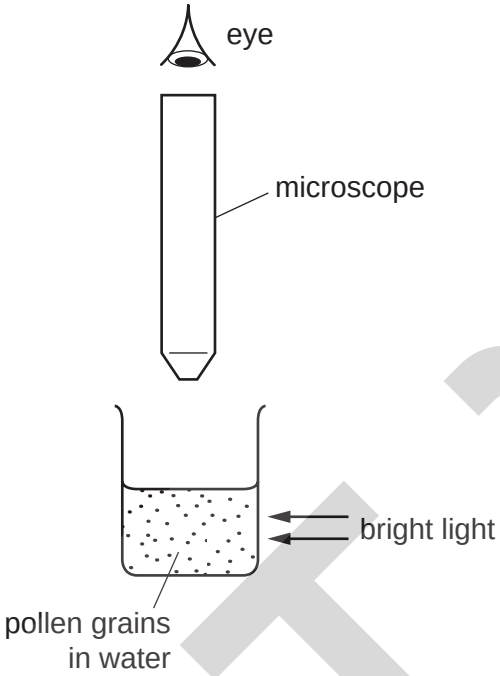

What are the moving specks of light?

A pollen grains being hit by other pollen grains

B pollen grains being hit by water molecules

C water molecules being hit by other water molecules

D water molecules being hit by pollen grains

16 A hole is drilled in a metal plate.

What happens to the length of the plate and to the diameter of the hole when the plate is cooled?

	length of plate	diameter of hole
A	decreases	decreases
B	decreases	increases
C	increases	decreases
D	increases	increases

© UCLES 2021
www.root19.com

+91 - 9969 353 591

17 Which statement describes a sensitive liquid-in-glass thermometer?

A a thermometer which can be used to measure very high and very low values of temperature

B a thermometer which gives the same increase in length of the liquid column for each degree of temperature rise

C a thermometer which is accurate because it has been calibrated

D a thermometer which gives a large increase in the length of the liquid column for each degree of temperature rise

18 A block of aluminium of mass 2.0 kg has an initial temperature of 20 °C. It absorbs 7300 J of thermal energy.

The specific heat capacity of aluminium is 913 J / (kg °C).

What is the final temperature of the aluminium block?

A 4.0 °C **B** 8.0 °C **C** 24 °C **D** 28 °C

19 A student sets up four cans. Each can contains the same mass of water at 90 °C.

The cans are identical except for the outside surfaces.

Which can will cool down the fastest?

A dull, black surface

B dull, white surface

C shiny, black surface

D shiny, white surface

20 Thermal energy is transferred by conduction in a metal bar.

Which statement is **not** correct?

A Fast vibrating ions leave the surface.

B Free moving electrons carry thermal energy through the bar.

C Ions vibrate and strike neighbouring ions to make them vibrate.

D Ions vibrate but do not change position.

www.root19.com +91 - 9969 353 391

21 A water wave passes into a region where the wave travels more slowly.

As it passes into the slow region, what happens to the frequency and what happens to the wavelength of the wave?

	frequency	wavelength
A	decreases	remains the same
B	increases	remains the same
C	remains the same	decreases
D	remains the same	increases

22 Light travelling at a speed of 3.0×10^8 m/s strikes the surface of a glass block and undergoes refraction as it enters the block.

The diagram shows a ray of this light before and after it enters the block.

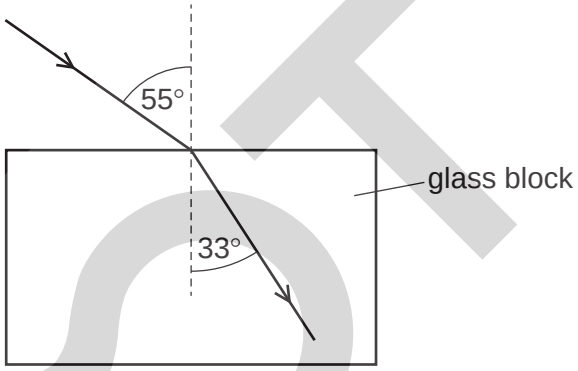

What is the speed of light in the glass?

A 1.8×10^8 m/s

B 2.0×10^8 m/s

C 4.5×10^8 m/s

D 5.0×10^8 m/s

23 Which statement about the image of an object formed in a plane mirror is correct?

A It is smaller than the object.

B It is the same size as the object.

C It is larger than the object.

D It is inverted.

24 An object is placed in front of a thin converging lens.

The diagram shows the paths of two rays from the top of the object.

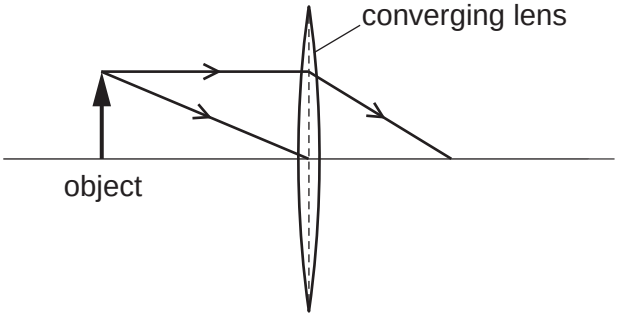

An image of the object is formed on a screen to the right of the lens.

How does this image compare with the object?

A It is larger and inverted.

B It is larger and the same way up.

C It is smaller and inverted.

D It is smaller and the same way up.

25 Here are three statements about the speed of electromagnetic waves.

1 The speed of an electromagnetic wave in a vacuum is 340 m / s.

2 The speed of an electromagnetic wave in a vacuum is 3.0×10^8 m / s.

3 The speed of an electromagnetic wave in a vacuum is approximately the same as in air.

Which statements are correct?

A 1 and 3 **B** 1 only **C** 2 and 3 **D** 2 only

© UCLES 2021
www.root19.com

+91 - 9969 353 391

26 The sound from a loudspeaker must pass through two materials to reach a microphone.

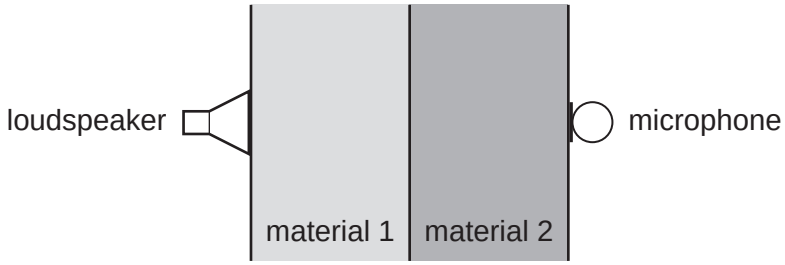

Which combination of materials gives the shortest time for the sound to reach the microphone?

	material 1	material 2
A	air	hydrogen
B	air	water
C	copper	aluminium
D	water	oil

27 Which method does **not** demagnetise a bar magnet?

A Heat the bar magnet and place it in the east-west direction to cool.

B Place the bar magnet in the east-west direction and hammer it.

C Place the bar magnet in a coil connected to an a.c. supply and slowly withdraw it.

D Place the bar magnet in a coil connected to a d.c. supply and slowly withdraw it.

© UCLES 2021
www.root19.com

+91 - 9969 353 591

28 Three piles of small nails, P, Q and R, are placed on a bench below three electromagnets.

One set of nails is made of copper, one of soft iron and one of steel.

Diagram 1 shows the situation when the electromagnets are switched on.

Diagram 2 shows the situation when the electromagnets are then switched off.

diagram 1
the switches are **closed**

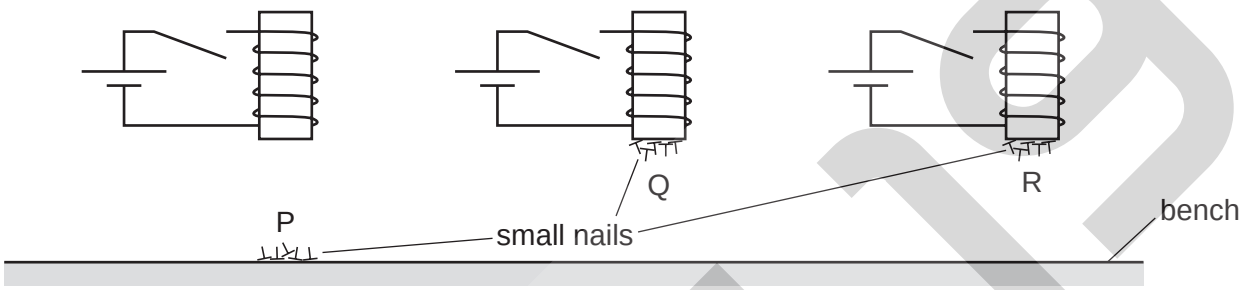

diagram 2
the switches are **open**

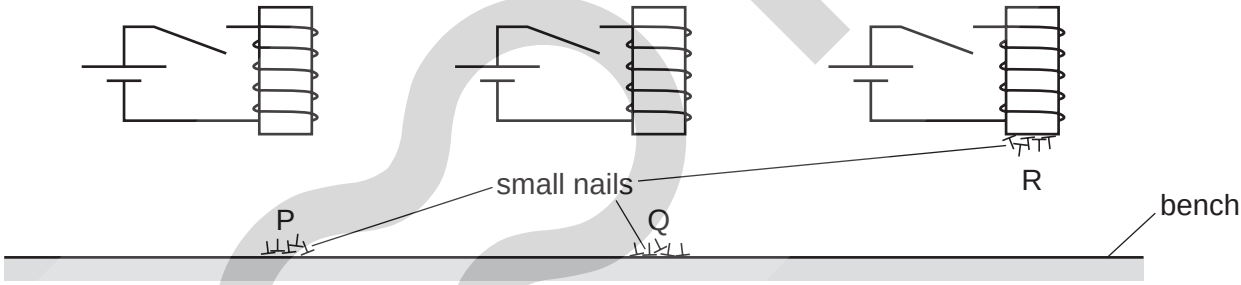

Which row correctly identifies the materials from which the nails are made?

	copper	soft iron	steel
A	P	Q	R
B	P	R	Q
C	Q	P	R
D	Q	R	P

© UCLES 2021
www.root19.com

+91 - 9969 353 391

29 A magnet is suspended by a cotton thread.

The magnet is displaced then allowed to swing freely until it comes to rest.

Why does the magnet always come to rest pointing in the same direction?

A because of the interaction between the electric field of the magnet and the electric field of the Earth

B because of the interaction between the electric field of the magnet and the magnetic field of the Earth

C because of the interaction between the magnetic field of the magnet and the gravitational field of the Earth

D because of the interaction between the magnetic field of the magnet and the magnetic field of the Earth

30 A student rubs a plastic rod with a cloth.

The rod becomes positively charged.

What has happened to the rod?

A It has gained electrons.

B It has gained protons.

C It has lost electrons.

D It has lost protons.

31 An isolated metal sphere is positively charged.

It is then brought near to another isolated metal sphere that is neutral.

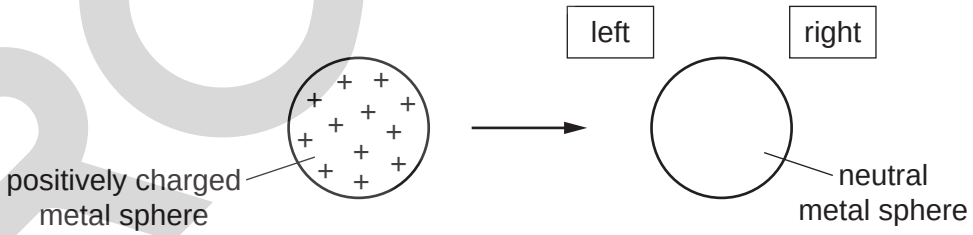

What happens to the charges on the neutral sphere as the positively charged sphere is brought close to it?

A Some positive charges move to the left and some negative charges move to the right.

B Some positive charges move to the right and some negative charges move to the left.

C Some positive charges move to the right, but the negative charges do not move.

D The positive charges do not move, but some negative charges move to the left.

www.root19.com +91 - 9969 353 591

32 Which circuit has a zero reading on the ammeter?

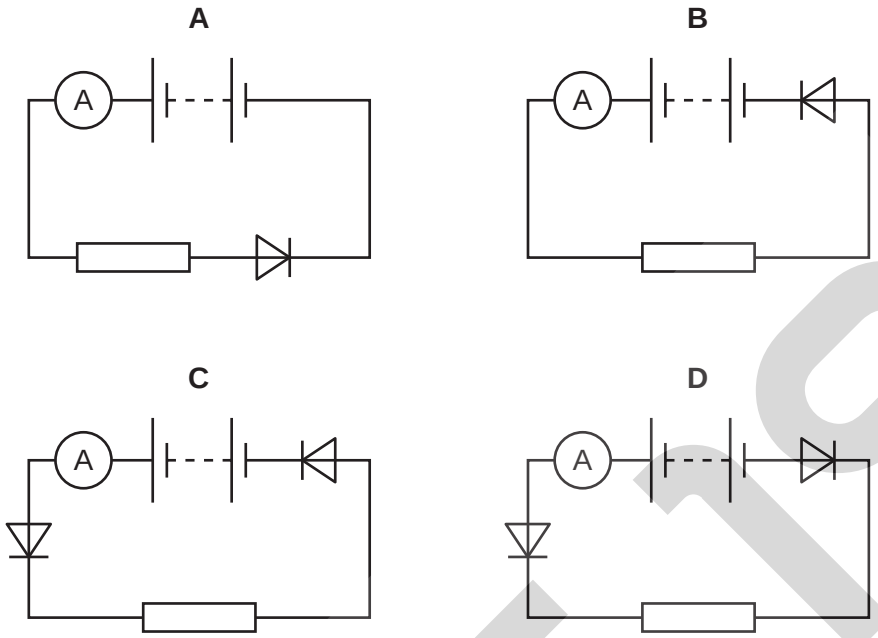

33 Two 10 Ω resistors are connected in series and then in parallel.

What is the combined resistance in each case?

	resistance in series / Ω	resistance in parallel / Ω
A	10	5
B	10	10
C	20	5
D	20	10

34 The diagram shows a combination of four logic gates that produce an output signal at R that depends on the states of the inputs P and Q.

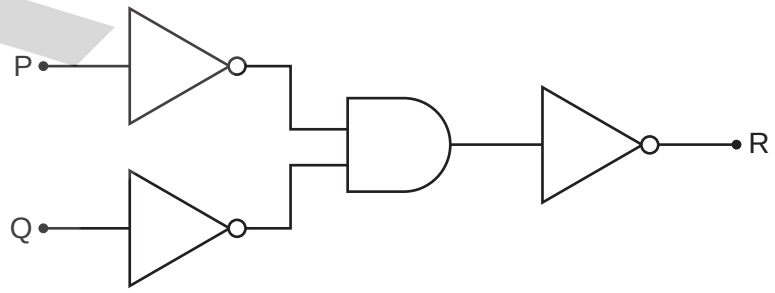

Which single logic gate produces the same effect as the combination?

A AND **B** NAND **C** NOR **D** OR

www.root19.com +91 - 9969 353 391

35 A solenoid is connected to a very sensitive ammeter. A rod is inserted into one end of the solenoid. The ammeter shows that there is a small electric current in the solenoid while the rod is moving.

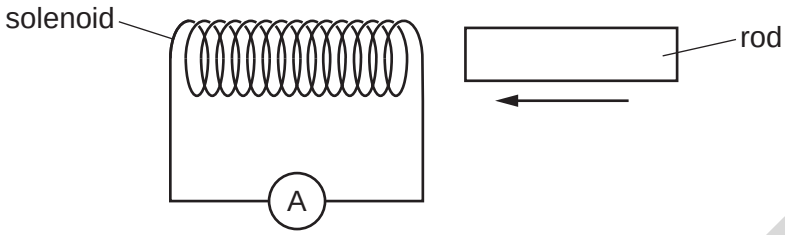

Which rod is being inserted?

A a heated copper rod

B a magnetised steel rod

C an uncharged nylon rod

D a radioactive uranium rod

36 The diagram shows a transformer.

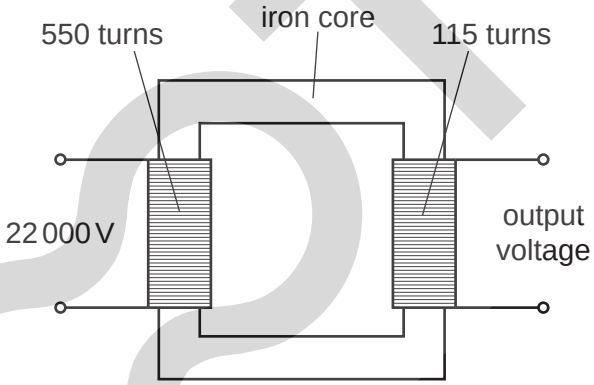

What is the output voltage?

A 0.35 V **B** 2.9 V **C** 4600 V **D** 105 000 V

37 Which row correctly states how nuclei behave during nuclear fission and during nuclear fusion?

	fission	fusion
A	nuclei join together	nuclei join together
B	nuclei join together	nuclei split apart
C	nuclei split apart	nuclei join together
D	nuclei split apart	nuclei split apart

www.root19.com +91 - 9969 353 591

38 The charge on a proton is *e*.

What is the charge on an electron and what is the charge on a neutron?

	electron	neutron
A	*e*	*e*
B	*e*	0
C	–*e*	–*e*
D	–*e*	0

39 Some radioactive nuclei decay to give new nuclei which are also radioactive. Part of a series of decays is shown.

$$^{238}_{92}\text{U} \rightarrow {}^{234}_{90}\text{Th} \rightarrow {}^{234}_{91}\text{Pa} \rightarrow {}^{234}_{92}\text{U} \rightarrow {}^{230}_{90}\text{Th} \rightarrow {}^{226}_{88}\text{Ra}$$

How many decays involve the emission of a β-particle?

A 1 **B** 2 **C** 3 **D** 5

40 The graph shows the activity of a radioactive source over a period of time.

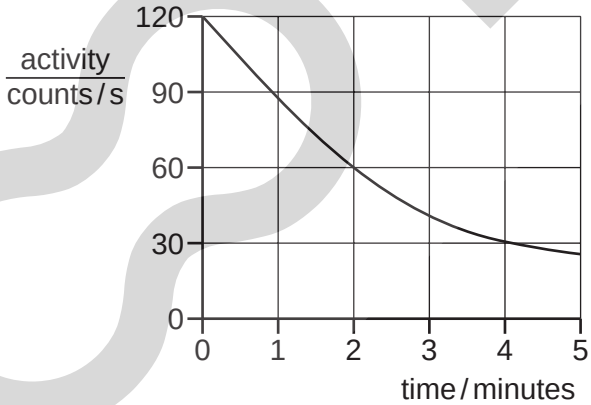

What is the half-life of the source?

A 1.0 minute **B** 2.0 minutes **C** 2.5 minutes **D** 4.0 minutes

Permission to reproduce items where third-party owned material protected by copyright is included has been sought and cleared where possible. Every reasonable effort has been made by the publisher (UCLES) to trace copyright holders, but if any items requiring clearance have unwittingly been included, the publisher will be pleased to make amends at the earliest possible opportunity.

To avoid the issue of disclosure of answer-related information to candidates, all copyright acknowledgements are reproduced online in the Cambridge Assessment International Education Copyright Acknowledgements Booklet. This is produced for each series of examinations and is freely available to download at www.cambridgeinternational.org after the live examination series.

Cambridge Assessment International Education is part of the Cambridge Assessment Group. Cambridge Assessment is the brand name of the University of Cambridge Local Examinations Syndicate (UCLES), which itself is a department of the University of Cambridge.

www.root19.com +91 - 9969 353 391